ARISTON

SPARE PARTS EXPLODED VIEW
STORAGE ELECTRIC WATER HEATERS

Model

ABSE VLS PRO INOX PW

R8218950-03 - 11/10/2023

EN	FR	IT	ES	DE	NL

Col	Reference	Model type	Begin	End
1	3700677	ABSE VLS PRO INOX PW 30	04-2021	08-2023
2	3700678	ABSE VLS PRO INOX PW 50	04-2021	-
3	3700679	ABSE VLS PRO INOX PW 80	04-2021	-
4	3700680	ABSE VLS PRO INOX PW 100	04-2021	-

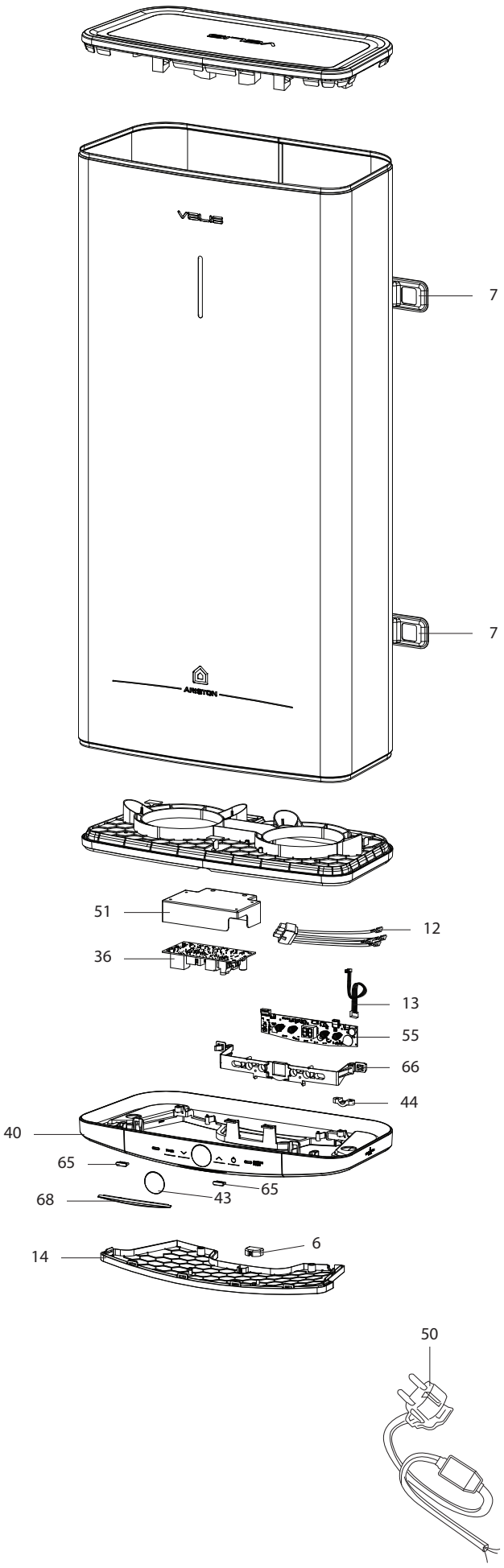
VELIS
ARISTON
7
7
51
12
36
13
55
66
44
40
65
65
68
43
6
14
50

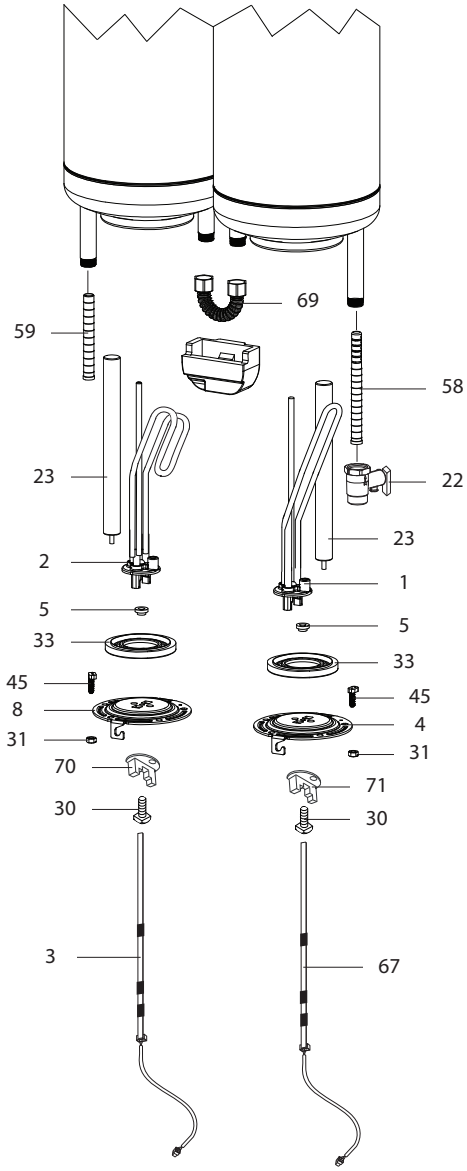
69
59
58
23
22
23
2
1
5
5
33
33
45
45
8
4
31
31
70
71
30
30
3
67

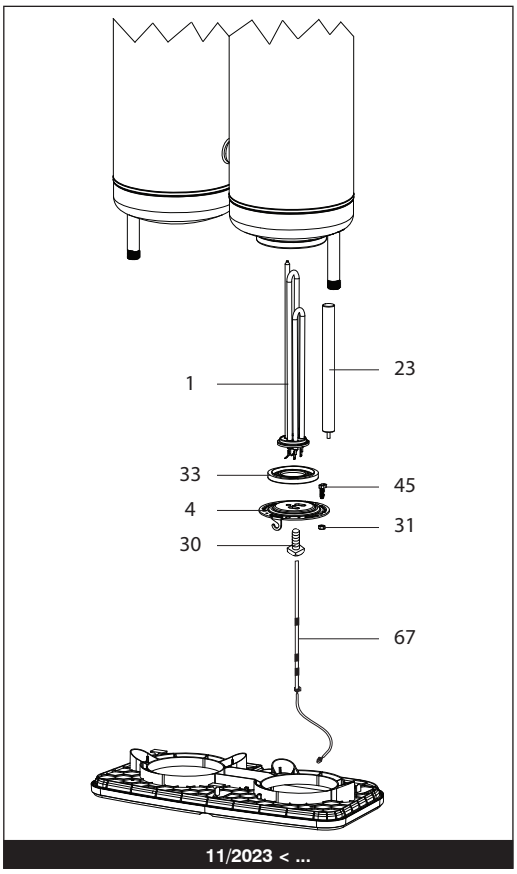
1
23
33
45
4
31
30
67
11/2023 < ...

R8227480

	Description	Manf. Pt. N	Type	1	2	3	4	5	6	7	8	9	10	11	12	13	14	15	16	17	18	From	to
				ABS. VLS INOX PW 30	ABS. VLS INOX PW 50	ABS. VLS INOX PW 80	ABS. VLS INOX PW 100															31	
0001	HEATING ELEMENT 1000+1500W 220-240V	65122238			●	●	●															11/23	
	HEATING ELEMENT 1000W 230V	65180040			●	●	●																10/23
	HEATING ELEMENT 1000W 230V	65180040		●																			
0002	HEATING ELEMENT 1500W 230V	65180069			●	●	●																10/23
	HEATING ELEMENT 1500W 230V	65180069		●																			
0003	WIRED NTC PROBE (OUTLET TANK)	65153300			●	●	●																10/23
	WIRED NTC PROBE (OUTLET TANK)	65153300		●																			
0004	FLANGE (5 HOLES)	65180159			●	●	●																10/23
	FLANGE (5 HOLES)	65180159		●																			
	FLANGE (5 HOLES)	65180459			●	●	●															11/23	
0005	WASHER	65180158			●	●	●																10/23
	WASHER	65180158		●																			
0006	WATER DRAIN STOPPER	65180442		●	●	●	●																
0007	SUPPORT BRACKET	65152905			●	●	●																10/23
	SUPPORT BRACKET	65152905		●																			
	SUPPORT BRACKET	65180461			●	●	●															11/23	
0008	FLANGE (5 HOLES)	65180160			●	●	●																10/23
	FLANGE (5 HOLES)	65180160		●																			
0012	WIRING (ELEMENT / MAIN BOARD)	65122222			●	●	●															11/23	
	WIRING (ELEMENT / MAIN BOARD)	65180072-01			●	●	●																10/23
	WIRING (ELEMENT / MAIN BOARD)	65180072-01		●																			
0013	WIRING (CONTROL BOARD)	65115286		●	●	●	●																
0014	PLASTIC COVER	65180444		●	●	●	●																
0022	SAFETY VALVE WITH LEVER (1/2” 6 BAR)	65151712		●	●	●	●																
0023	ALUMINIUM ANODE D:18 L:250 M5	65180466			●	●	●															11/23	
	ANODE D:21,3 L:180 M5	65180015			●	●	●																10/23
	ANODE D:21,3 L:180 M5	65180015		●																			
0030	SCREW M6X12	993000		●	●	●	●																
0031	NUT M6	994140		●	●	●	●																
0033	FLANGE GASKET	65111788			●	●	●																10/23
	FLANGE GASKET	65111788		●																			
	FLANGE GASKET	65180458			●	●	●															11/23	
0036	P.C.B. (MAIN)	65116249		●	●	●	●																
0040	BOTTOM BIG PLASTIC COVER	65180445		●	●	●	●																
0043	DISPLAY COVER	65180447		●	●	●	●																
0044	CABLE CLAMP	573266		●	●	●	●																
0045	SCREW M6X20	65151225		●	●	●	●																
0050	POWER CABLE WITH ELCB (16A 1,0м)	65150965		●	●	●	●																
0051	POWER BOARD BOX	65155810		●	●	●	●																
0055	CONTROL BOARD	65120778		●																			
	CONTROL BOARD	65120779			●																		10/23
	CONTROL BOARD	65120780				●																	10/23
	CONTROL BOARD	65120781					●																10/23
	CONTROL BOARD	65122248			●																	11/23	
	CONTROL BOARD	65122249				●																11/23	
	CONTROL BOARD	65122250					●															11/23	
0058	BAFFLE (1/2’’ H=159)	65152176		●	●	●	●																
0059	BAFFLE (1/2’’ H=100)	65152177			●	●	●																10/23
	BAFFLE (1/2’’ H=100)	65152177		●																			
0065	SIGNAL CAP	65180448		●	●	●	●																
0066	HOLDER FOR CONTROL BOARD	65180446		●	●	●	●																
0067	WIRED NTC PROBE (INLET TANK)	65153301			●	●	●																10/23
	WIRED NTC PROBE (INLET TANK)	65153301		●																			
	WIRED NTC PROBE (INLET TANK)	65155811			●	●	●															11/23	
0068	LED INDICATOR	65180449		●	●	●	●																
0069	BY-PASS CONNECTION	65154293			●	●	●																10/23
	BY-PASS CONNECTION	65154293		●																			
0070	TERMINAL SHIELD (RED)	65180070			●	●	●																10/23
	TERMINAL SHIELD (RED)	65180070		●																			
0071	TERMINAL SHIELD (BLUE)	65180068			●	●	●																10/23
	TERMINAL SHIELD (BLUE)	65180068		●																			

LIST OF THE ABBREVIATIONS

HW	: Hot water.
CW	: Cold water.
C	: Ceramic resistance (normal heating).
Ca	: Ceramic resistance (accelerated heating)
TP	: Immersion heater.
1F	: With fittings.
2F	: Without fittings.
3F	: With fittings and another outlet connection.
AMI	: With mixing valve.
SMI	: Without mixing valve.
PUISS	: Power of th appliance.
PN	: Appliance with normal pression.
LP	: Appliance with low pression.
PV	: Appliance with variable power.
PF	: Appliance with fixed power.

IDENTIFICATION PLATE

SERIAL NUMBER

6 Characters : 03 09 08
- Year of manufacture
- Manufacturing day
- Month of manufacture

9 Characters : 5 9 12 0606
- Year of manufacture
- Month of manufacture
- Sequencial number

14 Characters : SI-V-0B0 45 07 0001
- Sequencial number
- Year of manufacture : 6 → 2004, 7 → 2005, 8 → 2006, etc ...
- Month of manufacture : 25 → January, 13 → February, 32 → March, 35 → April, 39 → May, 45 → June, 43 → July, 29 → August, 40 → September, 38 → October, 51 → November, 12 → December
- Product model

14 Characters : 111518 XX 000010
- Month of manufacture
- Day of manufacture
- Sequencial number
- Year of manufacture

15 Characters : 02 11 00001 007843
- Year of manufacture
- Month of manufacture
- Product reference
- Sequencial number

21 Characters : 3200050 XX 08115 0000001
- Product reference
- Sequencial number
- Year (08) / Manufacturing day (115)

22 Characters : 3200050 XX 070115 0000001
- Product reference
- Sequencial number
- Year (07) / Month (01) / Manufacturing day (15)

The indications mentionned on the prices, commercial or technical literature and the scheme are written for your guidance and are available at a given time. The CONSTRUCTOR retains the power to modify the presentation, the form, the size, the conception or the material of the products.